Menu

INTERPUMP GROUP

RS99

GENERAL PUMP

RIDUTTORE PER MOTORI ENDOTERMICI
REDUCTION GEAR FOR GASOLINE & DIESEL ENGINES
RÉDUCTEUR POUR MOTEURS À COMBUSTION INTERNE
UNTERSETZUNGSGETRIEBE FÜR VERBRENNUNGSMOTOREN

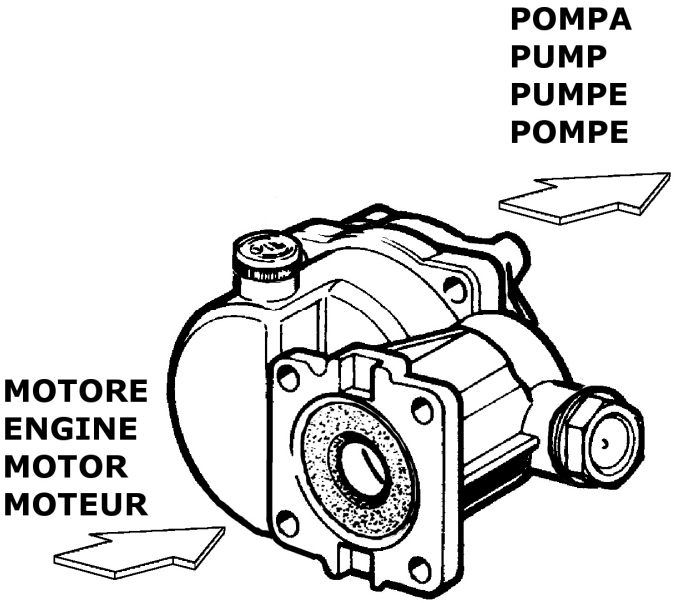

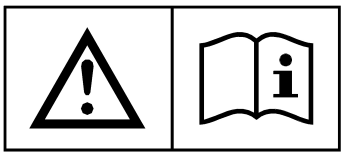

ISTRUZIONI D'USO
OPERATING INSTRUCTIONS
MODE D'EMPLOI
BEDIENUNGSANLEITUNG

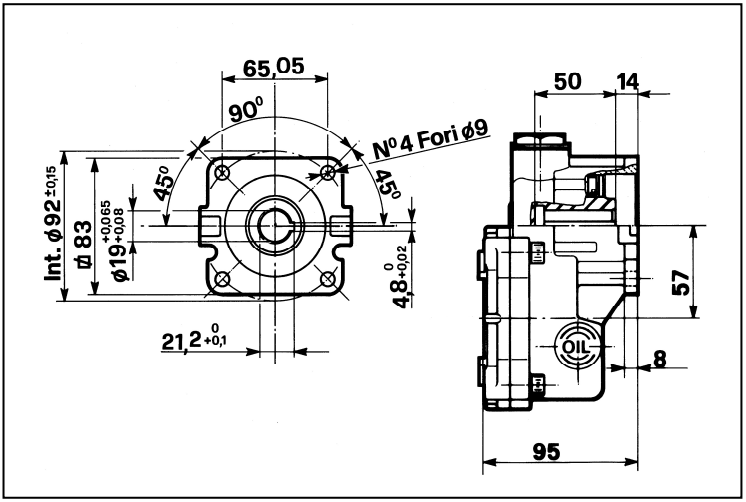

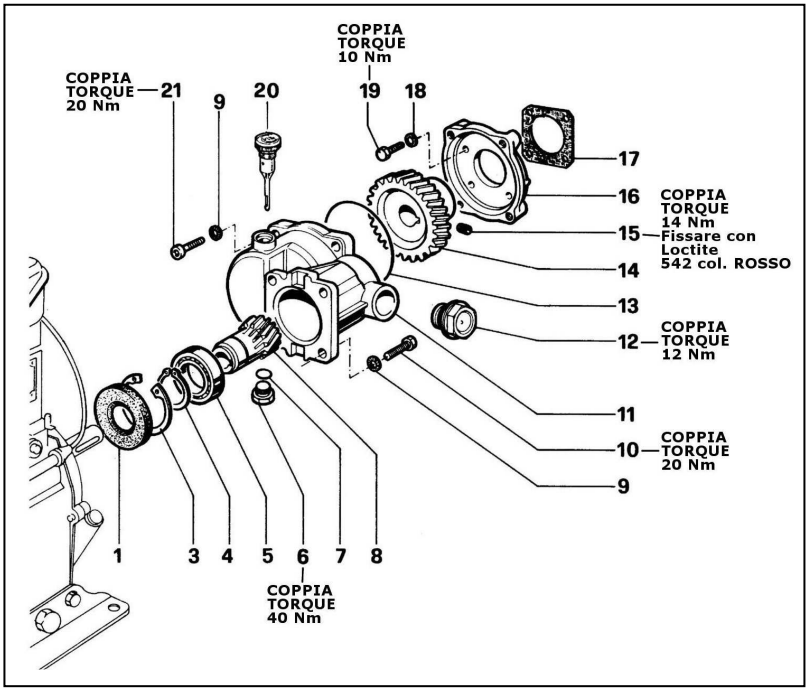

POS	CODICE CODE	DESCRIZIONE DESCRIPTION	N. PCS
1	90167400	Anello radiale Ø 35x65x10	1
3	90085000	Anello per foro Ø 62 UNI 7437	1
4	90069500	Anello per albero Ø 35 UNI 7435	1
5	91846400	Cuscinetto a sfere -6007-	1
6	98210000	Tappo G3/8x13	1
7	90383300	OR Ø 13.95x2.62	1
8	10020555	Pignone Z.13	1
9	96701400	Rosetta Ø 8.4 Schnorr	8
10	99274000	Vite 5/16"-24 UNF x7/8"	4
11	10020322	Carter riduttore	1

POS	CODICE CODE	DESCRIZIONE DESCRIPTION	N. PCS
12	97596800	Spia olio G3/4	1
13	90414100	OR Ø 85.32x3.53	1
14	10020655	Corona Z.30	1
15	99301700	Vite M8x10 UNI 5939	1
16	10020422	Flangia riduttore	1
17	10020784	Guarnizione	1
18	96693800	Rosetta Ø 6.4 Schnorr	4
19	99188200	Vite M6x20 UNI 5739	4
20	98210300	Tappo carico olio G3/8	1
21	99308400	Vite M8x30 UNI 5931	4

= ENGLISH =

TECHNICAL FEATURES		
ENGINE SHAFT DIAMETER	19mm	
MAX GEAR DRIVE POWER	3,7 kW max (5 HP)	
⚠ See power curve for continuous duty in view of the choice of the engine type		NA ISO 3046 ICXN CURVE
ENGINE FLANGE	SAE J609-A	
GEAR DRIVE RATIO (reduction)	i = 2,4 (3450/1450 rpm)	
OIL CAPACITY	0,16 L (5,4 fl.oz.)	
LUBRICATING OIL	See paragraph: "LUBRICATING OIL"	
WEIGHT (without oil)	2,7 kg (5,9 lb)	
INTERPUMP GROUP PUMPS	SERIES 44 SERIES 49 SERIES 50 SERIES 60 SERIES 63	all 1450 rpm versions

«Translated from original instructions»

THIS DOCUMENT PROVIDES THE INSTRUCTIONS FOR THE INSTALLATION, USE AND MAINTENANCE OF THE REDUCTION GEAR, THEREFORE IT IS AN INTEGRAL PART OF IT AND MUST BE READ CAREFULLY BEFORE ANY USE AND KEPT WITH CARE.
STRICTLY COMPLY WITH THE INSTRUCTIONS CONTAINED IN THIS DOCUMENT IN VIEW OF A SAFE AND EFFECTIVE USE OF THE REDUCTION GEAR.
FAILURE TO COMPLY WITH THESE INSTRUCTIONS MIGHT CAUSE EARLY FAULTS AND RESULT IN SITUATIONS OF DANGER, IN ADDITION TO VOIDING ANY WARRANTY.

1- GENERAL INFORMATION

1.1- The RS99 reduction gear is designed to be operated by a gasoline or diesel engine and to be coupled to the Interpump Group high pressure pumps. It must be used in connection with other mechanical units/components in order to create a system with a definite function.

1.2- Since the RS99 reduction gear is used within a complete system, installation and use must be suited to the type of system used and comply with the safety Regulations in force in the Country where the reduction gear is used.

1.3- Before using the reduction gear, make sure that the system the reduction gear is used with is certified to comply with the relevant Directives and/or Regulations.

1.4- Before installing and using the reduction gear for the first time, we suggest you check that it is undamaged and make sure that the rated features correspond to the required ones. If this is not the case, do not use the reduction gear and contact the after-sales service of Interpump Group for information.

1.5- In order to install the reduction gear correctly, follow the instructions for the assembly and for the connections with pump and engine as stated in this instruction manual and/or on the reduction gear itself.

1.6- Assembly and installation must be made by qualified staff only, who must have the necessary mechanical and technical skills and be informed of the operating and safety instructions contained in this document.

1.7- In view of a correct functioning of the reduction gear, and in particular of the pump it is coupled to, the rating of the engine used must be suited to the pump performance. In any case, the engine power must not exceed 3.7 kW (5HP).

⚠ **In case of doubts, do not hesitate to contact the after-sales service of Interpump Group.**

1.8- The installer must provide the ultimate consumer with the proper instructions for the correct use of the engine-reduction gear-pump assembly and, if necessary, of the system the assembly is used in connection with.

2- PACKAGE

2.1- Packages must be handled in compliance with the instructions stated on the packages themselves and/or provided by the manufacturer.

2.2- In case the reduction gear is not used immediately, it must be stored in its integral package and placed in areas which are not exposed to the weather and protected from excessive humidity and from direct sunlight. Moreover, it is advisable to place wooden pallets or other types of pallets between the package and the floor, in order to prevent the direct contact with the ground.

2.3- The package components must be disposed of in compliance with the relevant laws in force.

3- ASSEMBLY AND INSTALLATION

The positions mentioned in the following instructions refer to the exploded view.

Carefully clean all the driving parts/surfaces of the reduction gear, of the pump and of the engine.

3.1- Coupling to the pump:

3.1.1- Unscrew the 4 screws and remove the case cover - shaft outlet end of the pump the reduction gear must be coupled to. See table of TECHNICAL FEATURES in order to choose the pumps to be used.

3.1.2- Center the reduction gear flange pos. 16 on the pump case – shaft outlet end placing the gasket pos. 17 between them.

3.1.3- Fix the reduction gear flange pos. 16 to the pump by means of the four screws pos. 19 and tighten (torque wrench setting: 10 Nm).

3.1.4- Lubricate the pump shaft with grease in order to make the assembly easier and prevent contact oxidation.

3.1.5- Fit the crown gear pos. 14 to the pump shaft up to limit stop. Make sure that the feather key is present on the shaft.

3.1.6- Fix the crown gear pos. 14 to the pump shaft by tightening the screw pos. 15 with 542 Loctite (torque wrench setting: 14 Nm).

3.1.7- Lubricate the O-ring pos. 13 and place it into the seat of the reduction gear casing pos. 11.

3.1.8- Join the two parts of the reduction gear matching the reduction gear casing pos. 11 with the reduction gear flange pos. 16. Take care that the O-ring pos. 13 stays in place correctly. Position the toothing of the crown gear and of the pinion gear so as to make the mesh and the coupling easier.

3.1.9- IMPORTANT: Place the reduction gear casing pos. 11 horizontally taking care that when the reduction gear is assembled, the oil dipstick cap pos. 20 is positioned upwards.

3.1.10- Fix the reduction gear casing pos. 11 to the reduction gear flange pos. 16 by means of the four screws pos. 21 and tighten (torque wrench setting 20 Nm).

3.1.11- Screw down the oil drain cap pos. 6 (torque wrench setting 40 Nm) into the lower port of the reduction gear casing pos. 11.

3.1.12- Make the first oil filling by the oil dipstick cap hole pos. 20 up to the middle of the oil window cap pos. 12. Approximately 0.16 litres are needed. (See paragraph “LUBRICATING OIL”).

3.1.13- Screw down the oil dipstick cap pos. 20.

3.2- Coupling to the engine:

3.2.1- Lubricate the engine shaft with grease in order to make the assembly easier and prevent contact oxidation.

3.2.2- Center and couple the reduction gear/pump assembly to the engine by means of the flange taking care that the shaft and the hole are correctly aligned. See table of “TECHNICAL FEATURES” in order to choose the flange to be used with the engine. Make sure that the feather key is present on the engine shaft.

3.2.3- Do not force and/or damage the coupling of the engine shaft to the reduction gear pinion hole due to incorrect actions.

3.2.4- In order to obtain a good centering and a correct functioning we suggest you use engine shafts with the following machining tolerance for the shaft end:

Pinion	Engine shaft
P/n. 10020555 – Ø19 (+0.065/+0.08)	Ø19 h7 (0/-0.021)

3.2.5- Fix the reduction gear/pump assembly to the engine by means of the four screws pos. 10 and tighten (torque wrench setting: 20 Nm).

IMPORTANT: The pump must be fixed to the reduction gear only, therefore it must be suspended during working.

4- LUBRICATING OIL

4.1- For the inside lubrication use gear drive oils with cSt 40℃ ≥180 viscosity, better if containing addition agents in order to grant an excellent level of protection against wear, against foaming and to provide high oxidation and corrosion strength. We suggest you use ISO VG 220 DIN 51519 quality oils (or with 80W-90 SAE degree).

4.2- These oil types are valid for room temperatures between 0℃ and 30℃. In case of different temperatures, pl ease contact the after-sales service of Interpump Group.

4.3- Oil change

4.3.1- The oil change must be carried out when the reduction gear is at a working temperature.

4.3.2- Place a container under the drain plug pos. 6.

4.3.3- Remove the oil dipstick cap pos. 20 and then the drain plug pos. 6.

4.3.4- Wait until all the oil has been drained, then screw back the drain plug pos. 6 (torque wrench setting as stated above).

4.3.5- Fill with fresh oil up to the middle of the oil window cap pos. 12 and screw back the oil dipstick cap pos. 20.

IMPORTANT: The exhausted oil must be gathered in containers and disposed of contacting the authorized centres as established by the laws in force. The oil must not be dispersed in the environment for any reason.

5- MAINTENANCE

5.1- Maintenance and repair must be carried out by qualified and authorized staff only. Before any operation, make sure that the engine-reduction gear-pump assembly is shut down and made unusable.

5.2- A correct maintenance helps extend the working life and grants a better performance of the reduction gear.

5.3- Scheduled maintenance

5.3.1- After 50 working hours:

Change the oil after 50 working hours from the first use. Afterwards, the oil must be changed every 1000 working hours or once a year (See paragraph “Oil change”).

5.3.2- Every 500 hours

Check the oil window pos. 12 to verify the oil level. If necessary, add the oil up to the middle of the oil window. In case of a substantial decrease in the oil level, check that there are no leakages or drippings caused by an excessive wear or by breakings.

5.4- Replace the reduction gear parts with original spare parts only. Use only oil types as stated in the above paragraph.

IMPORTANT: After maintenance, we suggest you change the lubricating oil. Moreover, make sure that the reduction gear is re-assembled correctly and that the initial conditions are restored. If necessary, comply with the instructions contained in the above paragraph “ASSEMBLY AND INSTALLATION”.

5.5- In case of disposal, we suggest you take the reduction gear to an authorized disposal centre or contact the nearest INTERPUMP GROUP Authorized Service Centre.

IMPORTANT: The reduction gear shall not be tampered with for any reason and/or used for any purpose other than the use it has been designed for. In case of tampering, the manufacturer disclaims all responsibility as to the reduction gear functioning and safety.

6- WARRANTY CONDITIONS

6.1- The period and conditions of warranty are specified in the purchase contract.

6.2- Warranty is voided in case the reduction gear is used for improper purposes, used at higher performances than the rated ones, repaired with non-original spare parts or if it turns out to be damaged due to the non-compliance with the operating instructions or to unauthorized tampering.

Copyright

The content of these operating instructions is property of Interpump Group.
The instructions contain technical descriptions and illustrations that cannot be copied and/or reproduced, entirely or in part, nor distributed to third parties in any form and without in any case authorized written consent of the owner.
Offenders will be prosecuted according to the laws in force and proper legal actions will be instituted against them.

The information contained in this document may be modified without notice.

DICHIARAZIONE DI INCORPORAZIONE
(Ai sensi dell'allegato II della Direttiva Europea 2006/42/CE)

Il produttore **INTERPUMP GROUP S.p.A. – Via E. Fermi, 25 – 42049 S. ILARIO D'ENZA (RE) – Italia**
DICHIARA che l'attrezzatura identificata e descritta come segue:

Denominazione:	Riduttore
Tipo:	Riduttore per motori endotermici
Marchio di fabbrica:	INTERPUMP GROUP
Modello:	RS99

Risulta essere conforme ai requisiti delle sotto elencate direttive e successivi aggiornamenti:
Direttiva Macchine 2006/42/CE
Direttiva sulla restrizione dell'uso di determinate sostanze pericolose 2002/95/CE - RoHS
Direttiva sulla responsabilità del produttore 85/374/CE

UNI EN ISO 12100-1:2005 – UNI EN ISO 12100-2:2005

Il riduttore sopra identificato rispetta tutti i requisiti essenziali di sicurezza e di tutela della salute elencati nel punto 1 dell'allegato I della Direttiva Macchine e la relativa documentazione tecnica è stata compilata in conformità dell'allegato VII B.

Inoltre il produttore e il suo mandatario si impegnano a rendere disponibile, a seguito di una richiesta adeguatamente motivata, copia della documentazione tecnica pertinente il riduttore nei modi e nei termini da definire.

Il riduttore non deve essere messo in servizio finché l'impianto al quale il riduttore deve essere incorporato è stato dichiarato conforme alle disposizioni delle relative direttive e/o norme.

Persona autorizzata a costituire il fascicolo tecnico Nome: Maurizio Novelli

Indirizzo: INTERPUMP GROUP S.p.A. Via E. Fermi,25 S. Ilario d'Enza (RE) Italy

Persona autorizzata a redigere la dichiarazione: L'amministratore delegato Ing. Paolo Marinsek

Reggio Emilia 6/05/2010 Firma _____

DECLARATION OF INCORPORATION
(According to annex II of European Directive 2006/42/EC)

The manufacturer **INTERPUMP GROUP S.p.A. – Via E. Fermi, 25 – 42049 S. ILARIO D'ENZA (RE) – Italy**
DECLARE that the device identified and described as follows:

Description:	Reduction gear
Type:	Reduction gear for gasoline and diesel engines
Trademark:	INTERPUMP GROUP
Model:	RS99

Complies with the requirements of the below-listed directives and following updates:
Directive 2006/42/EC Machinery
Directive 2002/95/EC Reduction of hazardous substances - RoHS
Directive 85/374/EC Liability for defective products

UNI EN ISO 12100-1:2005 – UNI EN ISO 12100-2:2005

The above-mentioned reduction gear complies with all the essential requirements of safety and health protection listed in annex I, point 1 of the Machinery Directive and the relevant technical documents are compiled in accordance with annex VII B.

Moreover, in response to a reasoned request, the manufacturer and their mandatory undertake to transmit copy of the technical documents on the reduction gear within the terms and in the ways to be determined.

The reduction gear must not be put into service until the system into which the reduction gear is to be incorporated has been declared in conformity with the provisions of the relevant directives and/or norms.

Person authorized to compile the technical documents Name: Maurizio Novelli

Address: INTERPUMP GROUP S.p.A. Via E. Fermi,25 S. Ilario d'Enza (RE) Italy

Person empowered to draw up the declaration: Ing. Paolo Marinsek (Managing Director)

Reggio Emilia 6/05/2010 Signature _____