Menu

TX15150

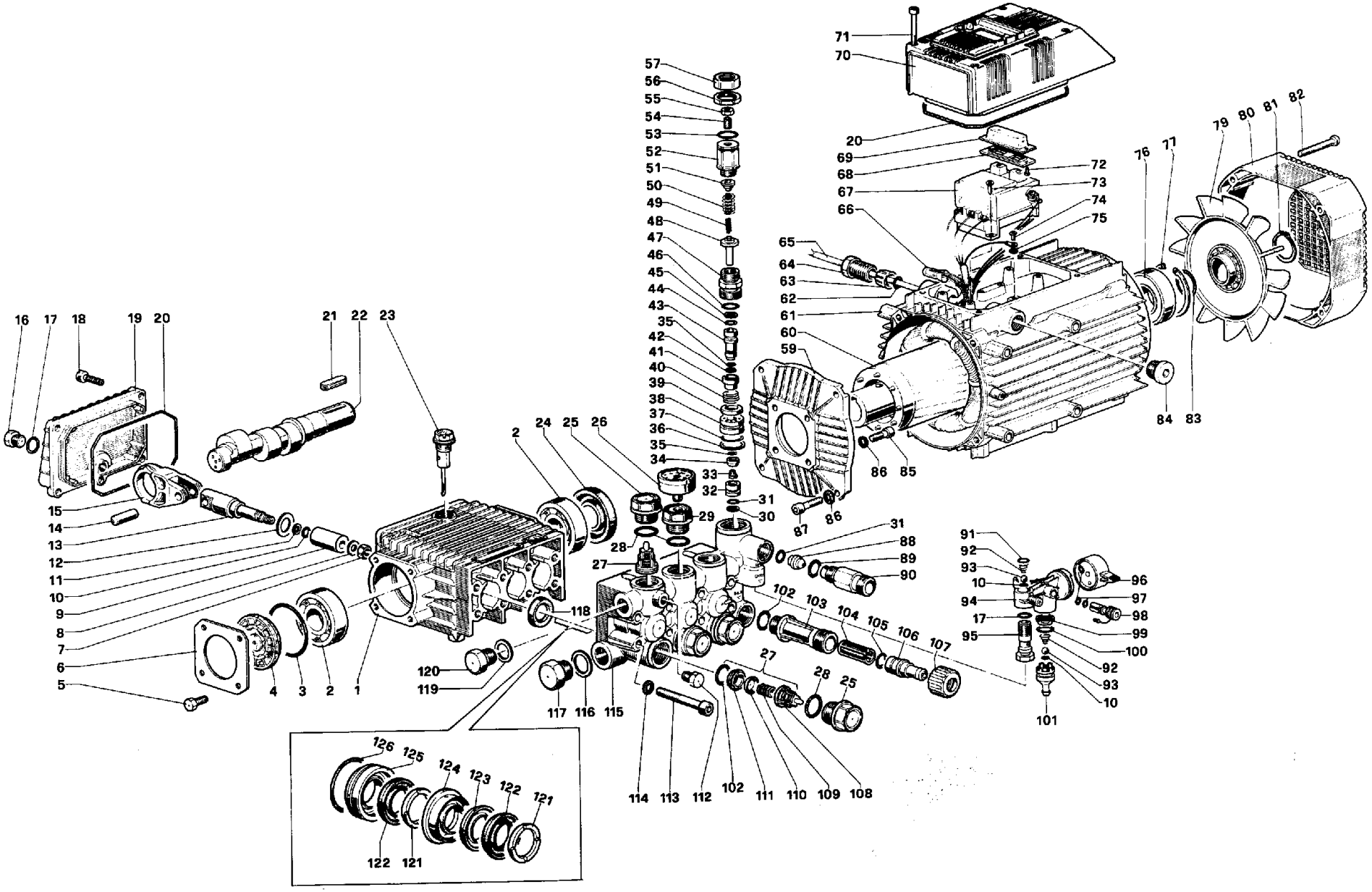

TX15150

POS	REF	QTY
1	44.0100.22	1
2	91.8328.00	2
3	90.4097.00	1
4	44.2118.01	1
5	99.1807.00	4
6	50.1500.74	1
7	92.2216.00	3
8	96.7008.00	3
9	52.0400.09	3
10	90.3572.00	5
11	90.5022.00	3
12	96.7350.00	3
13	44.0500.66	3
14	97.7340.00	3
15	44.0300.22	3
16	98.2041.00	1
17	90.3585.00	2
18	99.1837.00	5
19	44.1600.22	1
20	90.3920.00	2
21	91.4892.00	1
22	44.0203.35	1
23	98.2103.00	1
24	90.1641.00	1
25	98.2226.00	5
26	94.5824.00	1
27	36.7115.01	6
28	90.3847.00	6
29	98.2227.00	1
30	90.5065.00	1
31	90.3822.00	2
32	36.3164.66	1
33	99.1509.00	1
34	36.3190.66	1
35	90.3575.00	2
36	90.5144.00	1
37	90.3600.00	1
38	36.3229.70	1
39	36.3231.72	1

POS	REF	QTY
40	94.7485.00	1
41	36.3230.70	1
42	90.5025.00	1
43	36.3234.70	1
44	90.3820.00	1
45	90.5052.00	1
46	90.3857.00	1
47	36.3228.70	1
48	36.3233.70	1
49	94.7345.00	1
50	94.7436.00	1
51	36.3169.70	1
52	36.3185.70	1
53	90.3598.00	1
54	99.3054.00	1
55	92.2218.00	1
56	92.2935.00	1
57	36.3186.70	1
59	10.0501.22	1
60	43.3460.02	1
61	43.3201.02	1
62	90.4028.00	2
63	43.2128.51	2
64	43.2127.51	2
65	10.7273.01	1
66	93.5790.00	1
67	93.5179.00	1
68	42.2120.74	1
69	42.2119.51	1
70	43.2112.51	1
71	99.1720.00	4
72	99.0650.00	2
73	99.1450.00	2
74	99.1515.00	1
75	96.6913.00	1
76	91.8372.00	1
77	90.0850.00	1
79	42.0300.51	1
80	43.0400.51	1

POS	REF	QTY
81	90.0655.00	1
82	99.1658.00	4
83	90.3863.00	1
84	98.2173.00	1
85	99.1867.00	4
86	96.6938.00	8
87	99.1897.00	4
88	10.0076.66	1
89	90.3832.00	1
90	10.0147.70	1
91	90.3582.00	1
92	94.8217.00	2
93	97.4782.00	2
94	36.3216.51	1
95	36.2563.70	1
96	36.3217.51	1
97	90.3570.00	3
98	36.3220.51	1
99	36.3219.51	1
100	90.3831.00	1
101	36.3218.51	1
102	90.3841.00	7
103	36.3182.51	1
104	92.8925.00	1
105	90.3828.00	1
106	36.2569.51	1
107	92.9828.00	1
108	36.2025.51	6
109	94.7376.00	6
110	36.2001.76	6
111	36.2003.66	6
112	98.1966.00	1
113	99.3175.00	8
114	96.7014.00	8
115	44.1201.41	1
116	96.7514.00	1
117	98.2176.00	1
118	90.1614.00	3

POS	REF	QTY
119	96.7380.00	1
120	98.2100.00	1
121	51.1000.51	6
122	90.2620.00	6
123	90.2622.00	3
124	52.2166.70	3
125	44.0800.70	3
126	90.3612.00	3

KIT NO	KIT 88	KIT 89	KIT 90	KIT 123	KIT 130	KIT 23	KIT 123	KIT 124	KIT 137	KIT 138
POSITION INCLUDED	122 123	124	121	125-126	121-122 123-124 125-126	118	102-108 109-110 111 (27)	25-28	30-31-32 33-34-35 36-37-38 39-40-41 42-43-44 55	10-17-91 92-93-97 98-99 100-101
QTY	6~3	3	6	3	1~2	3	6	6	1	1

TX15150

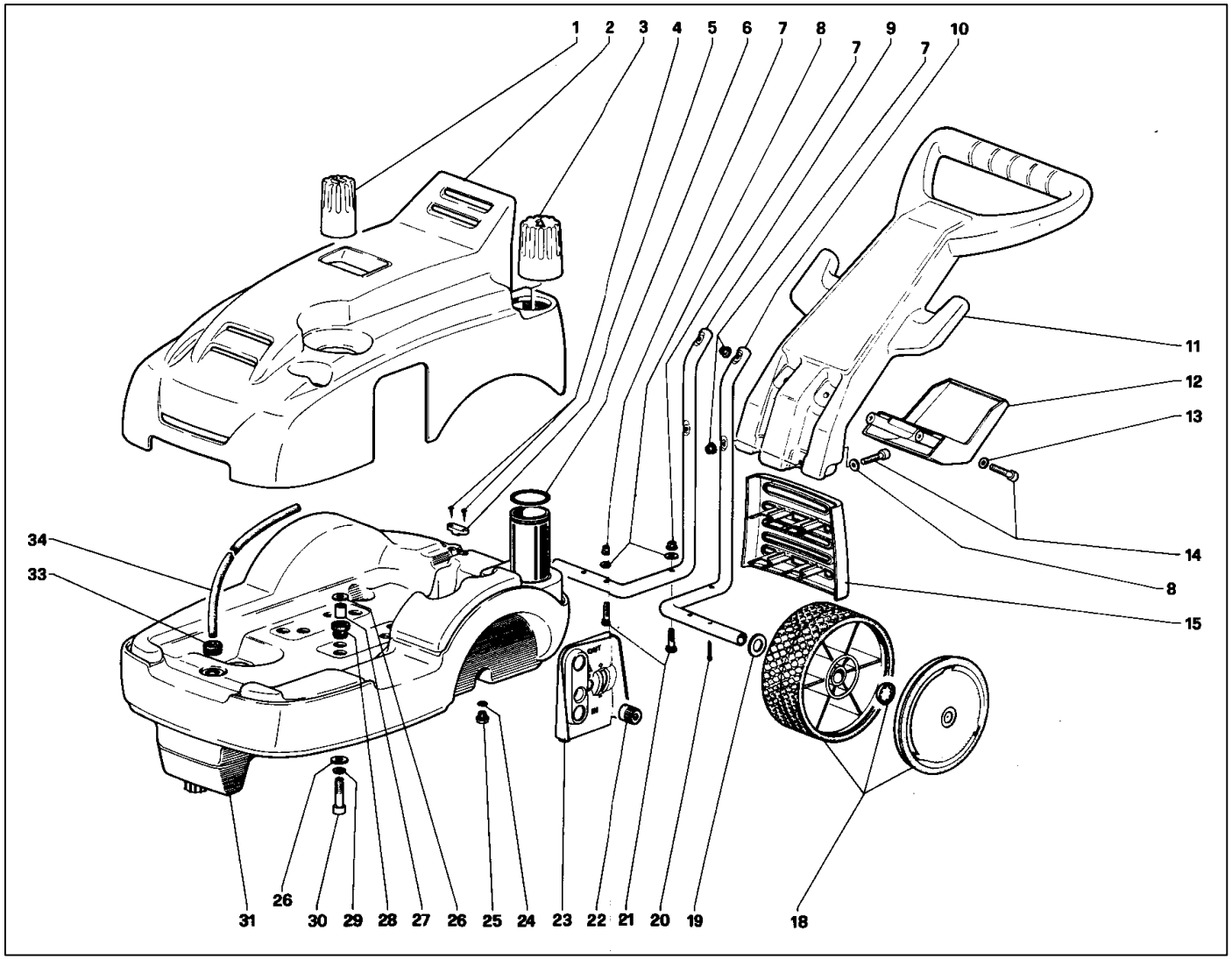

POS	REF	QTY
1	36.3221.51	1
2	23.0083.51	1
3	23.0087.51	1
4	99.1312.00	2
5	23.0095.51	1
6	90.3889.00	1
7	92.2040.00	8
8	96.6962.00	6
9	23.0089.88	1
10	23.0088.88	1
11	23.0093.51	1
12	23.0102.51	1
13	96.6925.00	2
14	99.1943.00	4
15	23.0086.51	1
18	96.9327.00	2
19	96.7521.00	2
20	91.7129.00	2
21	99.1929.00	4
22	52.2122.51	1
23	23.0090.51	1
24	90.3818.00	1
25	98.2041.00	1
26	96.7072.00	8
27	23.0099.70	4
28	23.0098.47	4
29	96.7016.00	4
30	99.3129.00	4
31	23.0092.02	1
33	23.0101.47	1
34	10.0529.98	1

TXLANCM - TXLANCR

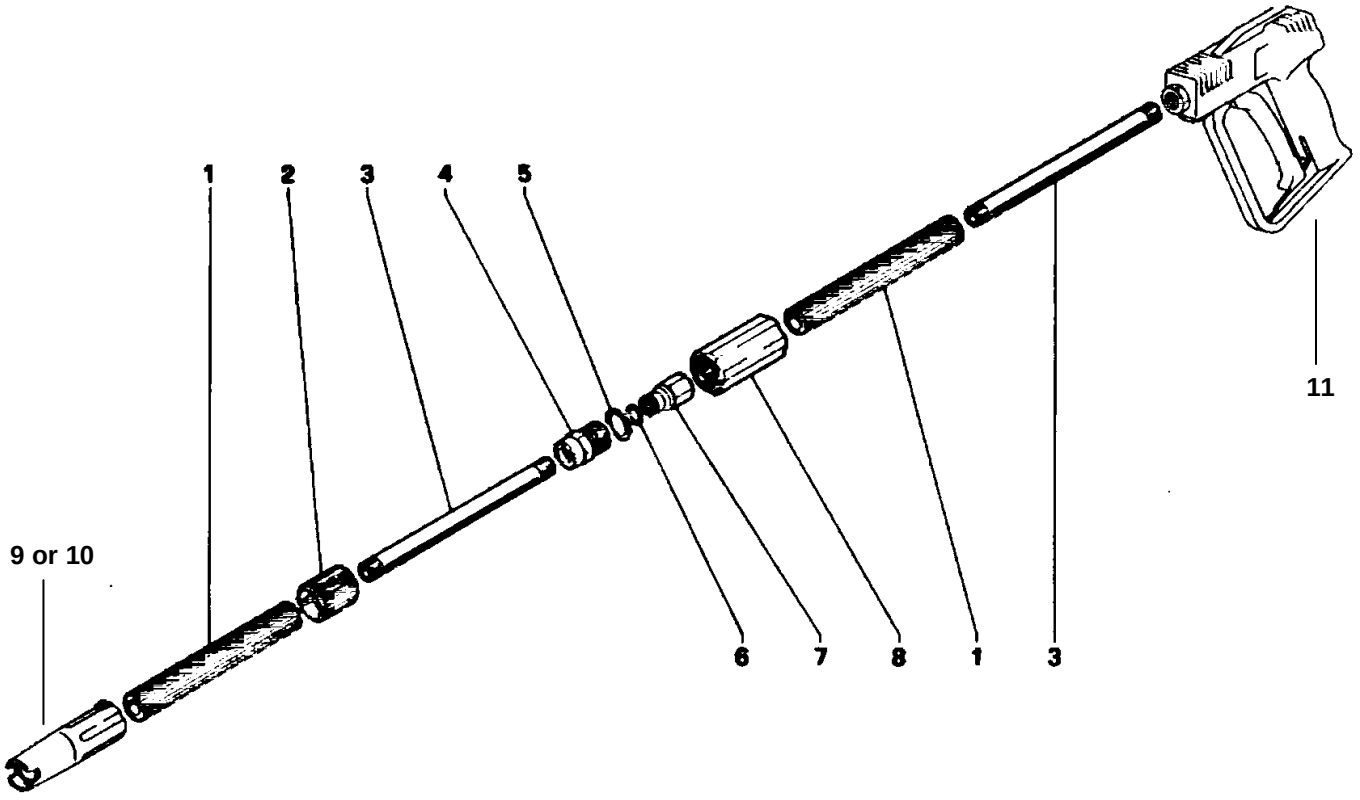

POS	REF	DESCRIPTION	QTY
1	18.0126.98	HAND GRIP 2	2
2	10.0542.51	PROTECTION 1	1
3	18.0127.89	TUBE G 1/4	2
4	10.0120.70	FEMALE COUPLING	1
5	90.3845.00	O-RING DIA 18,72X2,62	1
6	90.3820.00	O-RING DIA 9,13X2,62	1
7	10.0534.70	MALE COUPLING	1
8	10.0532.02	KNOB	1
9	MULTIREG	ADJUSTABLE NOZZLE HEAD (TXLANCM)	1
10	ROTOTEK1.5	ROTOTING NOZZLE HEAD (TXLANCR)	1
11	P3	WASH GUN	1
1-5	QUICK35	LANCE (NOZZLE END)	1
1,3,6,7,8	FIX35	LANCE (GUN END)	1